Image shows mesh arc shade (MA)

Low Voltage Canopy Mount

X03C1

SPEC SHEET

Material: Machined aluminum with electroplated finish.

Sec. Voltage: 12V (fixture).

Mounting: Rotatable and easy to position. C1C mounts to 2" x 2" (51mm x 51mm) octagonal back box and C1M retrofit to existing standard J-box using custom mounting plate (included). Requires remote class II transformer (not included).

Shade: Mesh arc shade included.

Stem: Standard 2" (51mm). Custom stem available in 1" (25mm) increments. Maximum length 96" (2438mm)**.**

Accessories: No accessory available for this fixture.

Lamp (not included): MR16, 50W Max. Covered glass recommended. (Note: GE constant color lamp cannot be used with glass shade.) For use with LED type MR16 check lamp manufacture for specification and compatibility.

Approval: Dry locations. Approved to US and Canadian standards by CSA.

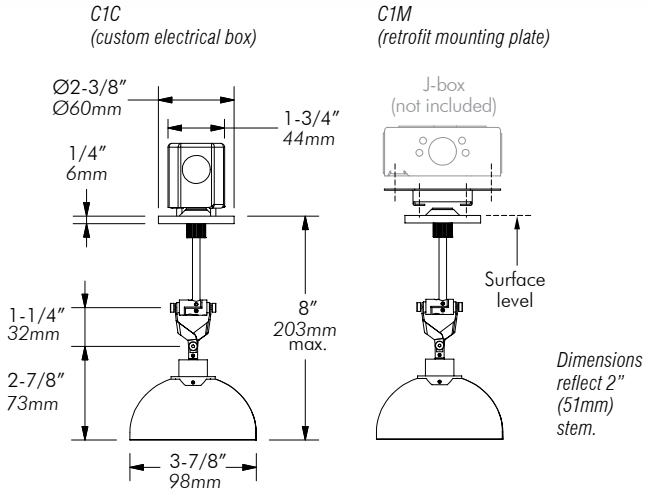

Type:

Project:

Modified:

Quantity:

Notes:

arc

CODE	MOUNT		SHADE*	STEM	ACCESSORIES		FINISH
X03		-			**NA**	-	
	C1C = Ø2-3/8" x 1/4" canopy w/ custom electrical box **C1M** = Ø2-3/8" x 1/4" canopy w/ retrofit mounting plate		**MA** = mesh arc	**2** = 2" (51mm) **X** = custom length	**NA** = no accessory		**MC** = matte chrome **BN** = brushed nickel

***Note:** Shades are not recommended with LED lamps.*

***Note:** Dimensions above reflect a 1" stem. Custom length available in 1" increments. Maximum length for ceiling is 96" and 16" for SF mount.*

MP LIGHTING®

t1.877.708.1184 f604.708.1185 www.mplighting.com
16 West 4th Avenue, Vancouver BC V5Y 1G3, Canada

Copyright © MP Lighting. All technical information in this document is subject to change.

06-2011