Copyright © MP Lighting All technical information in this document is subject to change.

CLASS II REMOTE MAGNETIC TRANSFORMER

TLW120MII300

SPEC SHEET

Features:

- Hard wired remote transformer.
- 6 reset able circuit breakers for each line.
- 6 output circuits.
- Overload protection on primary and secondary.
- Dimmable with any incandescent dimmers (i.e. Lutron Diva).

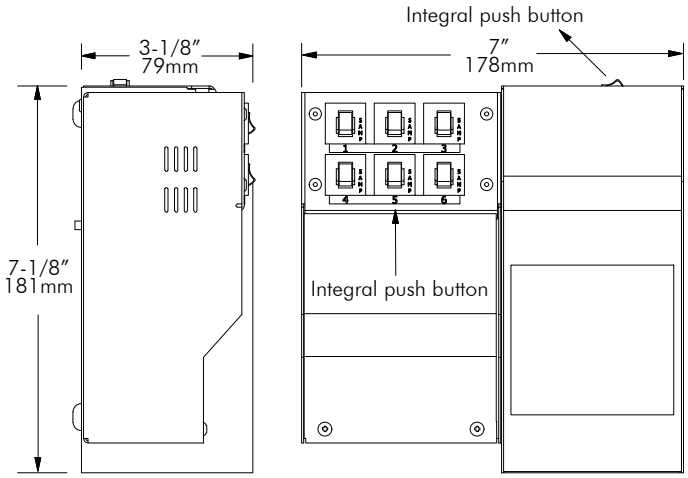

AC Input Voltage:	120V, 60Hz
AC Output Voltage:	11.5V
Output Wattage:	300W Max (6 x 50W)
Power Factor:	95% Min
Typical Efficiency:	95%
Short Circuit Protection:	Yes
Overload Protection:	Yes
Dimming Function:	With Any Incandescent Dimmers (not included)
Operating Temperature:	-10 ~ 50°C (14 ~ 122°F)
Maximum Case Temperature:	70°C (158°F)
Humidity (Non-Condensing):	5% ~ 95%
Case Material:	Black Steel Casing
Weight:	4.1kg (9 lbs)
Rated:	Dry Locations
Approval:	UL Listed

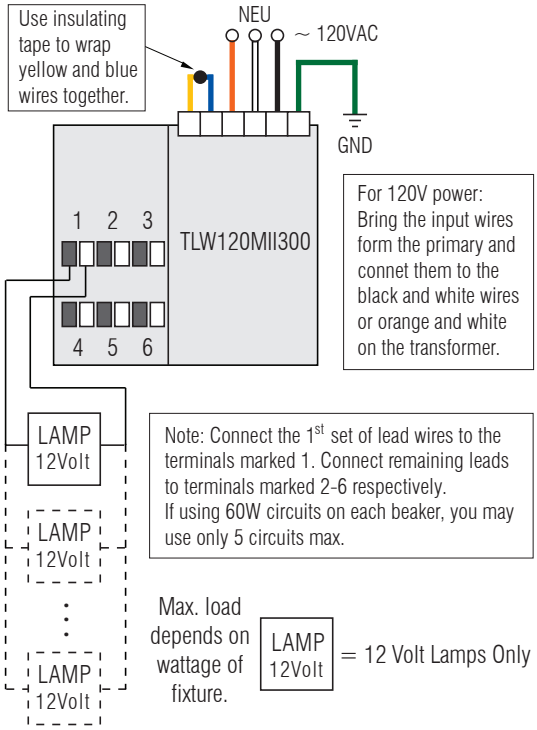

* Consult factory for maximum wiring length.

Ordering:

TLW120MII300

code

[Project]

[Quantity]

[Note]

MP LIGHTING®

16 W 4TH AVE VANCOUVER BC V5Y 1G3 CANADA
T 604 708 1184 F 604 708 1185 MPLIGHTING.COM

Datecode 0808