Shown with SHB
(metal shroud, black)

18W Spotlight with Active Cooling System (ACS)[1]

L223C2

SPEC SHEET

Application: Interior directional light for wall, picture or signage illumination.

Electrical: 7 x 2.5W, 700mA LEDs.

Input Voltage: 24V DC
Power Consumption: 21W

Power Supply: (not included) **DC** - Powered by remote 24V DC driver. Recommended TLDAV100W24V. Dimmable with 100W 24V driver and controller, 0~10V dimming. Consult factory.

Weight: 1lbs (0.5kg).

Material: Anodized aluminum. RoHS compliant.

Mounting: Mounts to custom 2" x 2" (51mm x 51mm) octagonal box (included) or Retrofit to existing standard octagonal box using custom mounting plate (included).

Accessories: Multiple accessories can be selected, up to two lenses and a shroud (sold separately).

Approval: Dry locations. Approved to US and Canadian standards by CSA.

[1] Active Cooling System (ACS) detects temperature changes and control speeds of a cooling fan. Visit www.mplighting.com/support/resource for more information.
Patent # (US): 8070324
Patent Application # (Germany): 11 2009 001 839
Patent Application # (Japan): 2011-520291

C2C
(custom octagonal box)

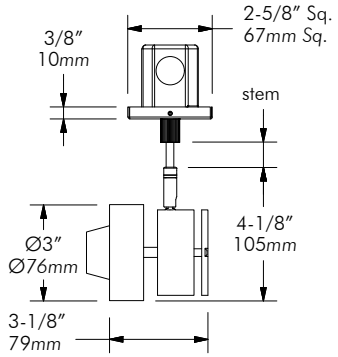

C2M
(retrofit mounting plate)

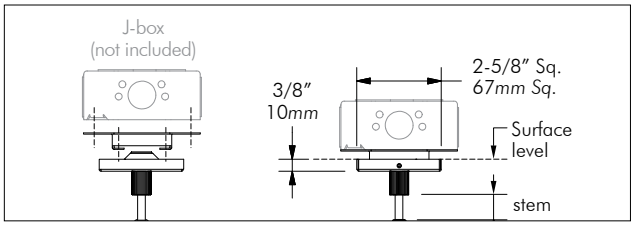

Type:

Project:

Modified:

Quantity:

Notes:

CODE	MOUNT		COLOR	BEAM	STEM	ACCESSORIES*		FINISH
L223		-		**N**			-	**M**

C2C = 2-5/8" x 1/4" canopy w/ custom octagonal box
C2M = 2-5/8" x 1/4" canopy w/ retrofit mounting plate

W20 = 2000K
W27 = 2700K
W30 = 3000K
W35 = 3500K
W41 = 4100K

Note: *W20 has consistent binning that falls within 1.5 MacAdam ellipse.*

N = narrow flood (25°)

2 = 2" (51mm)
X = custom

NA = no accessory
BE = beam elongator
CS = crystal spreader
MS = mistlite spreader
ELB = eggcrate louver, black
SH = metal shroud
SHB = metal shroud, black

**Multiple accessories can be selected.*

M = matte clear anodized

MP LIGHTING®

t 1.877.708.1184 f 604.708.1185 www.mplighting.com
16 West 4th Avenue, Vancouver BC V5Y 1G3, Canada

Copyright © MP Lighting. All technical information in this document is subject to change.

18W Spotlight with Active Cooling System (ACS)[1]

L223C2

SPEC SHEET

Lumen test results provided by MP Lighting integrating sphere

Photometric Data

L223
7 x 2.5W, 25°
3000K Std
591 lm

Polar Candela Distribution

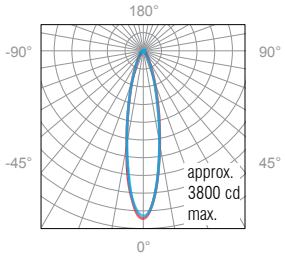

Illuminance at a Distance

	Center Beam FC	Beam Width	
1.5′	1,678.61	0.6′	0.6′
3.0′	419.65	1.2′	1.2′
4.5′	186.51	2.4′	2.4′
6.0′	104.91	3.0′	3.0′
7.5′	67.14	3.0′	3.0′
9.0′	46.63	3.6′	3.6′

0° Spread: 22.6° 90° Spread: 22.7°

Chromaticity Diagram

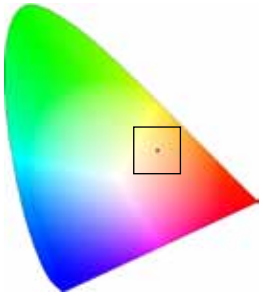

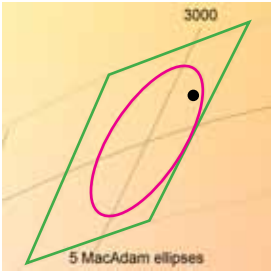

ANSI Bin MacAdam Ellipse

[v] MP LIGHTING®

t 1.877.708.1184 f 604.708.1185 www.mplighting.com
16 West 4th Avenue, Vancouver BC V5Y 1G3, Canada

Note: *Various operating factors may cause differences between lab and field results. As specifications may change without notice, please refer to the LED Lamp Index located in the "Downloads" section of each product webpage for the most current information.*

Copyright © MP Lighting. All technical information in this document is subject to change. 12-2011